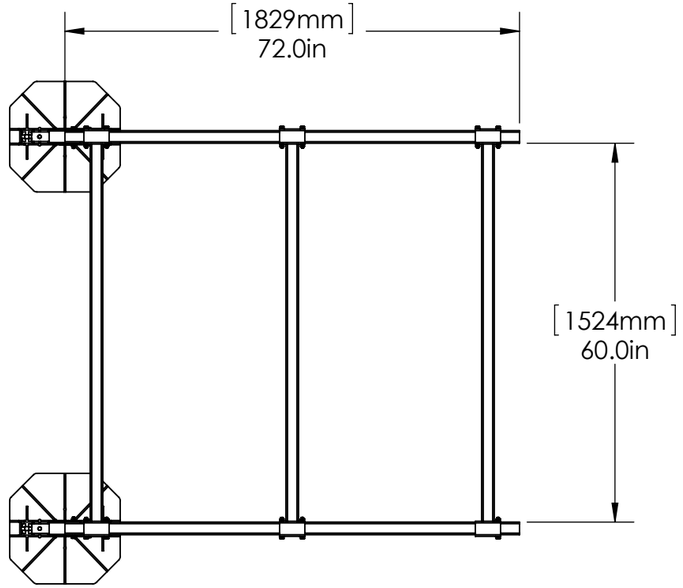

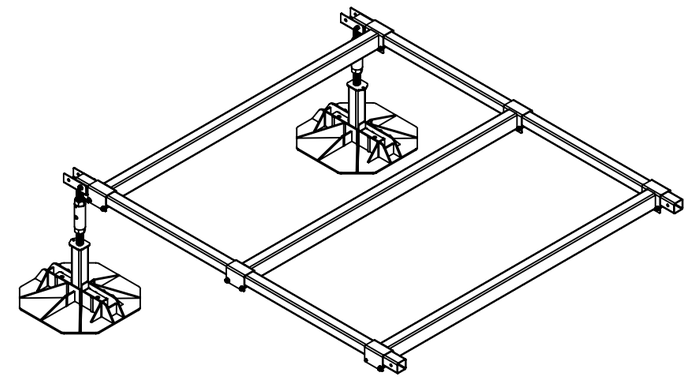

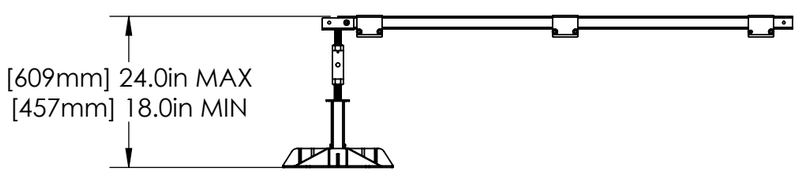

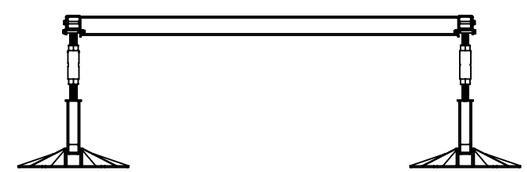

ECOFOOT THIS FOOT IS GREEN	DESCRIPTION: EFXL6EXT-PB6CB603	DATE:	APPROVED:	REVISION: A ECOFOOT.CA	