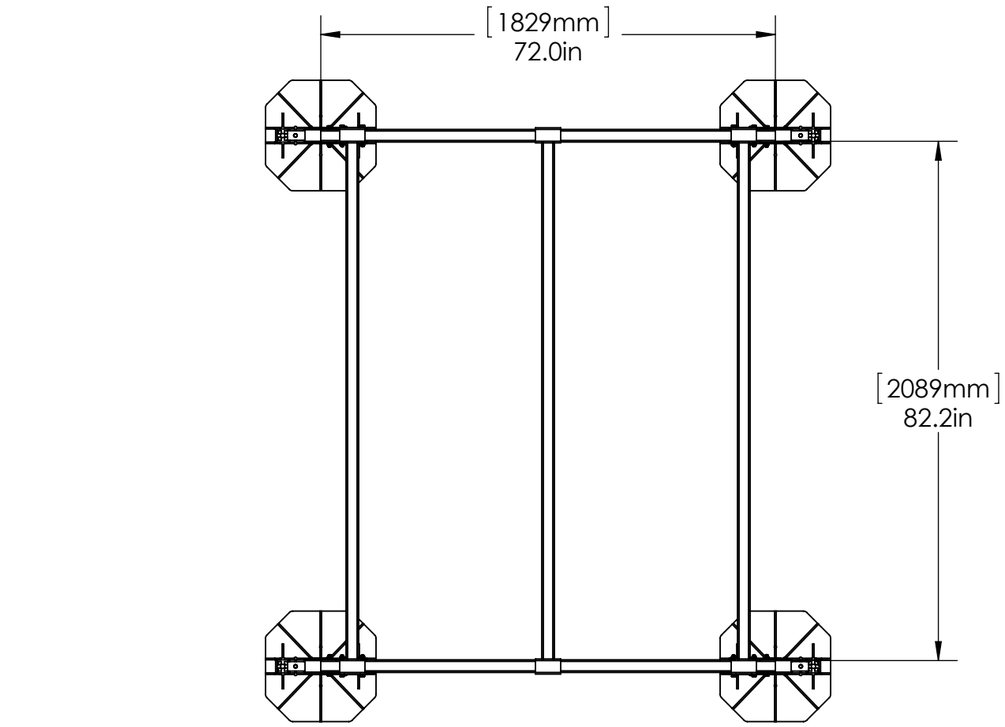

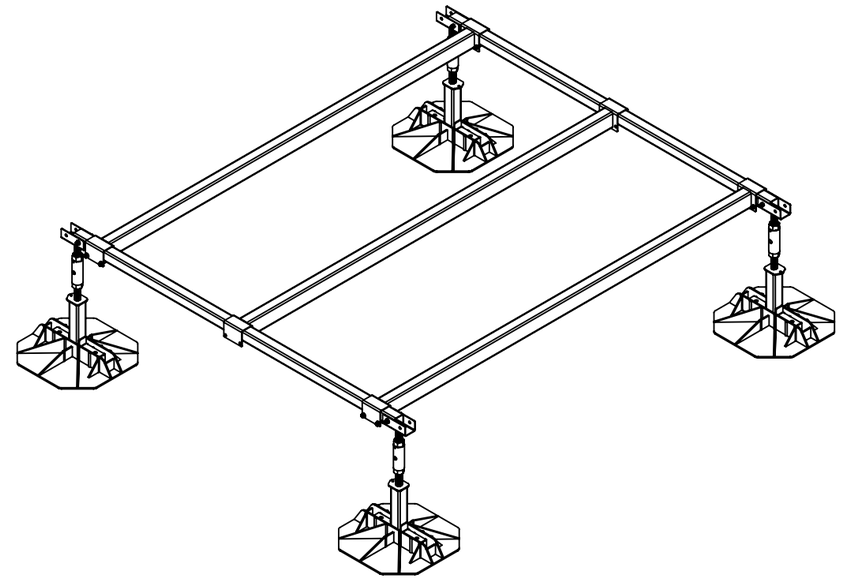

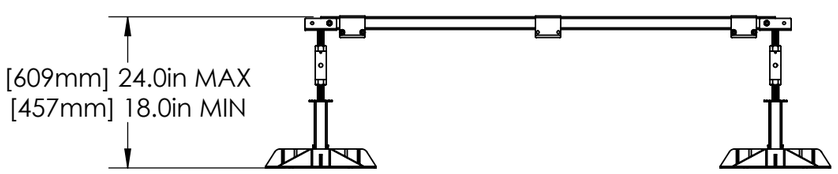

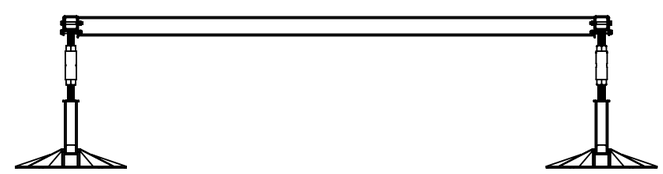

ECOFOOT THIS FOOT IS GREEN	DESCRIPTION: EFXL6-PB6CB823	DATE:	APPROVED:	REVISION: A ECOFOOT.CA	