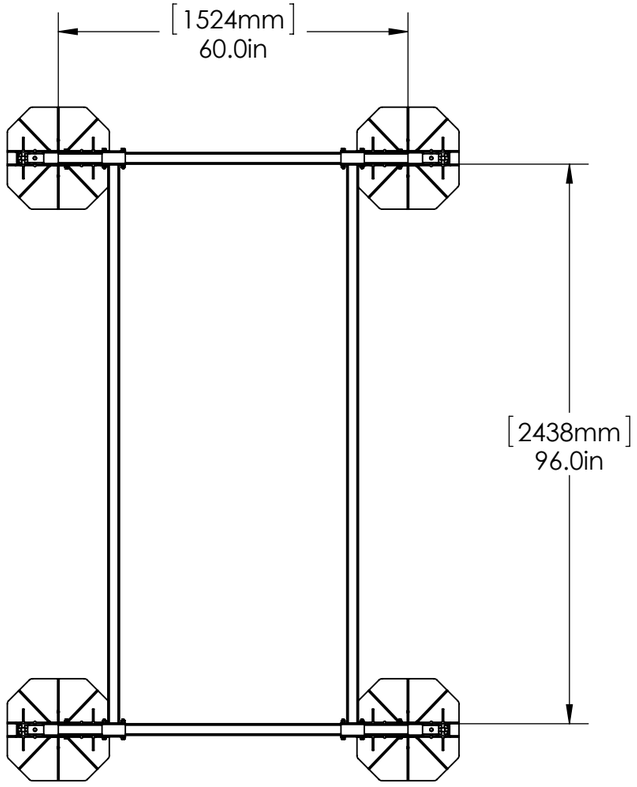

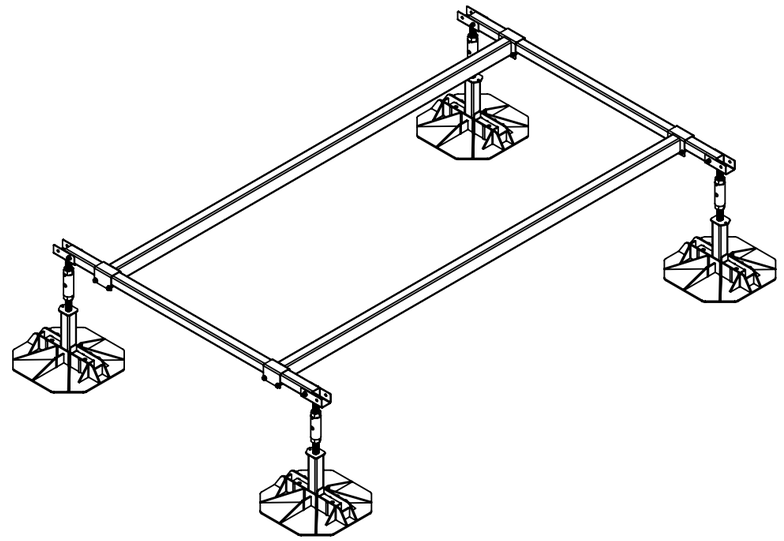

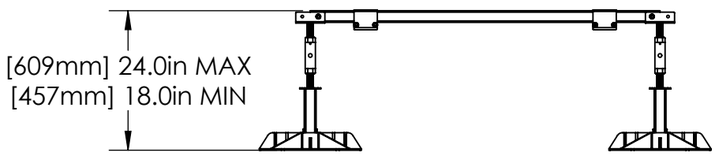

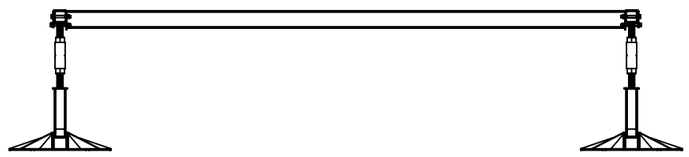

ECOFOOT THIS FOOT IS GREEN	DESCRIPTION: EFXL5-PB5CB962	DATE:	APPROVED:	REVISION: A ECOFOOT.CA	