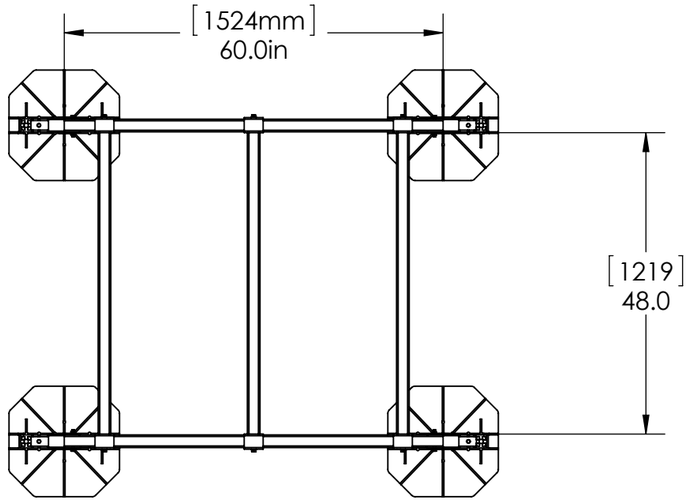

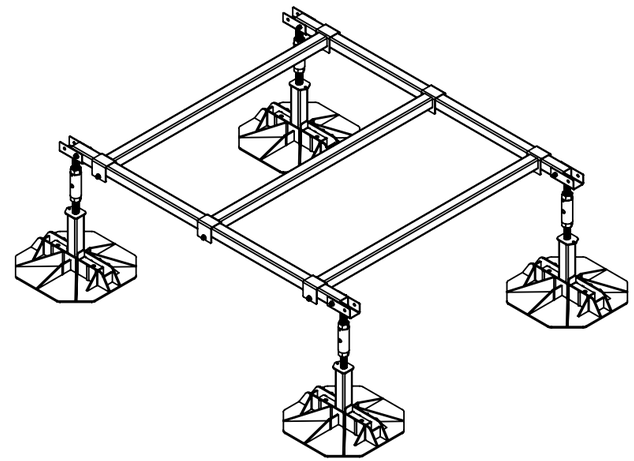

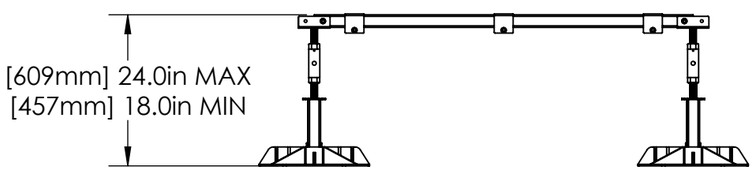

ECOFOOT THIS FOOT IS GREEN	DESCRIPTION: EFMD5-PB5CB483	DATE:	APPROVED:	REVISION: A ECOFOOT.CA	